THE TRIANGULAR MONORAILROAD

An Interesting and Instructive Description of an Invention Introducing a New Plan of Constructing and Operating Roadway and Cars. -:- -:- -:- -:-

Spelling, Carl Crisp

THE TRIANGULAR MONORAILROAD

BY

THOMAS CARL SPELLING

Author of "Law of Private Corporations"; "Extraordinary Relief"; "Injunctions"; "New Trial and Appellate Practice"; "Trusts and Monopolies"; "Corporate Management and By-Laws"; "Federal Safety Appliance Law"; "Power of Congress Over Interstate Commerce"; "Bossism and Monopoly," "Political Deceptions and Delusions," etc.; formerly Attorney to Interstate Commerce Commission and Assistant to U. S. Attorney General.

Description of a recent epoch-making Invention, which should interest the Sociologist, Scholar, Statesman, Capitalist and Business Men Generally.

Published

by

THE AUTHOR,
115 Broadway,
New York City.

Copyright 1914

by

Thomas Carl Spelling

TF6.4
.S6

15-1062

DEC 30 1914 $0.10

©CL.A388995
no1

The Triangular Monorailroad

YOUR OPPORTUNITY.

Wars of force between foreign nations may distract and injure us, but will not end or suspend the interminable conflict at home between the new and old, the economically progressive and wasteful. This statement of an obvious truth is not prefatory to a general discussion, except to the extent that a presentation of this enterprise necessarily involves certain aspects of the general subject of transportation.

In carrying out my purpose to install a new mechanism for the carrying of persons and property and in placing a description of the new mechanism before others, I shall not hesitate to use the first personal pronoun, or to speak very directly and positively, as a means to an end, however reluctant I would be, did it not appear proper in the premises.

I will state here as broadly, emphatically and conspicuously as possible, that the triangular monorailroad is a real invention, not a mere inspiration. It is a result of laborious and thorough experimentation. It meets a public necessity. It will revolutionize transportation, materially effect finance, and have a far reaching effect on production and commerce. The writer of this, who is the inventor and patentee, has accomplished a few things of more than transitory importance. Of this, a few others at least need not be reminded. At any rate he has not been an idler and has found time to study mechanical action and coaction as well as defects and oversights in the devices and machines for doing the work of the world. He has obtained nine patents on inventions, but this is the only invention to which he

now gives serious attention. I deem the setting forth publicly of this matter of sufficient importance to justify its direct statement by me personally, reluctant as I am to put myself forward in so unusual a relation. The fact that a thing is new, or original, or useful, or meritorious, or that it possesses all these characteristics, no longer insures for it a public hearing through ordinary channels of publicity, unless it be also something that can be so set forth and staged that it appeals to the popular imagination.

The monorail as a support for cars in motion is not new; but the triangular monorailroad is new. With this statement I couple another which may be a tax on the crudility of some who read it. The two-rail system is too expensive for any nation's full industrial development; and especially is this true of a country of wide territorial expanse and comparatively sparse population This statement will sooner or later be accepted, the sooner the better.

The mere propulsion of the wheels of a car in single file on a single rail has been for many years known to be economical in various ways; but the problem has always been the provision of an unyielding superstructure. In some of the contrivances this was so weak that trains on the monorail, at only moderate speed, tended to tear down the side supports and topple over. Other forms of overhead support were so complicated as to involve a prohibitory investment and expense for upkeep and maintenance. Now this invention exactly and fully meets both objections. It consists in a continuous frame, triangular in form, having a small triangle within a larger triangle, constituting an intregal part thereof. The base of the larger triangle is a beam which performs the office of a cross-tie. The base of the smaller triangle is a bar or beam connecting the two sides of the larger triangle over the space

through which the engine, or other motive power, and the cars are to move.

There has never been any difficulty with respect to the motive power as a matter distinct from the vehicular construction. It is obvious that size, arrangement, and strength of rolling stock must vary according to the dimensions of the railway and its uses. I shall not attempt to describe either engine or motor, or electrical appliances, or cars, in technical terms or otherwise than as an incident to my description of the structure within which they are to be used. For a description in detail, which any one versed in the use of mechanical terms can fully grasp, I refer to the appendices A and B hereto where can be found the specifications, claims and drawings of both patents.

Attention is called at the outset to the fact that this mono-railroad may be constructed to accommodate engines and cars of any size, though of course there must always be sufficient room in the engine or motor for an engineer or motorman. And yet it is clear that ample space can be found without cramping in the cab of an engine or motor of small dimensions. The engine or motor must be in a frame of the size and general outline of a car, and provided with one or more drive wheels below as well as its own side rollers and holding apparatus therefor as for a car.

The description of the roadway most easily understood is that which supposes that we have all the parts on the ground and are proceeding to construct it. We will then suppose that we have a stretch of firm level ground and are to construct a roadway for cars measuring eight feet from the top of the supporting rail to the cross-beam which is to be the base of the triangle constituting the apex of each larger triangle.

We first lay down three parallel sills which may be of any suitable dimensions, but to have a

level top face. They must be bolted, of course, or otherwise firmly joined together. The middle sill, at any rate, must present a level surface of sufficient width to accommodate the rail which is to be laid on it. From exterior to exterior these sills will occupy a width of ten feet. Across these we now lay the first cross-tie. It is ten feet long and if two inches thick and three inches wide that will be ample, because there is absolutely no strain on it. But we imbed for the ful length of it an iron slab about an inch and a half wide and a half inch thick, its top surface being flush with the top surface of the tie, the slab being firmly attached to the tie with screws or otherwise. This slab is slotted near each end so that the ends of the beams constituting the sides of the larger triangle may be inserted therein and firmly held. We now make a notch in each of the sills and lay the tie with the iron or steel slab imbedded therein, so that it is flush with the surface of each sill.

We next turn our attention to the two sides of the triangle. These are to be of good seasoned oak or other hardwood timber about 3 inches square and 13½ feet long, steel jacketed where they are to unite with the tie and where they join the overhead cross-bar. They are also to be capped with iron and pointed at the tops, where they are jointed together. Suitable provision must also be made at their upper junction for a rod which will in the completed structure extend from triangle to triangle throughout, securely binding them together. These fastenings and joints need not be here particularly described, and will present no difficulty to the mechanical engineer. The parts of the triangle are now joined to the cross-tie, the connecting bar is inserted as shown in the drawings, and a completed triangle now stands across the sills, its base imbedded in the tie through the iron slab. Similar triangles

are set in at uniform distances from each other along the entire trackway. The spaces between them will vary according to the use in view, to the dimensions of rolling stock to be used, weight of traffic, etc. Ordinarily an intervening space between them of ten feet will be permissible.

To the inside of each side-piece and just under the cross-bar will be attached the retainer of the the grooved rail with which the horizontally turning rollers connected with the top of the framework of the engine and cars will contact. Each retainer will be securely attached to both the side piece and cross-bar by a shield riveted to the former and overlapping the latter. The exterior side of the grooved rail will be flat, while the inside face will be concave, not unlike one side of the rail seen on ordinary railroad tracks. It is designed that these horizontal wheels shall constantly contact with the guide rails; hence the arrangement for the resillient support described in the specifications. Good service could undoubtedly be had without resilliency, but not without unpleasant noise and shock. The resillient feature renders oscillation impossible and causes the shock to be absorbed by springs, rubber bearings, or other resillient contrivances, also causing rapid movement to be safe and noiseless.

All lengths of sill, supporting rail and grooved rails should be uniform, but, in order to cause the joints to alternate, a line of roadway would start with unequal lengths. In other words, a length of the supporting rail should not join directly over the junction of two lengths of sill, nor should two joints formed by ends of the grooved side-rails be directly opposite each other. But these are details easily taken care of.

Attention is now called to the fact that a roadway so constructed is a continuous frame, a complete mechanically constructed vehicular conduit. That upon which the weight of the vehicle and

its load rests, and through which it moves, presents the characteristics of absolute uniformity in extension, its uniformity not controlled or affected by ulterior forces. The rails, the sills, the grooved side rails, and the top rod in combination with the attached ties and sides constitute a continuous frame-work, capable of sustaining an immense weight, even where the sub-support is removed for a considerable space. In other words, if the soil or other foundations were entirely removed from under several feet of track, trains could still run over the part without accident or delay, though of course such an operation should not be prolonged. The reason for this is self-suggestive in part, but this reference to the fact opens the way to many and varied points of advantage possessed by this structural form.

A train used in the Triangular frame is autonomous. The cars and motors will be all firmly coupled together, and were it not for convenience in handling and provision for grades and curves, a car might be of any great length desired. Double couplers which will admit of only very slight vertical play, and very little more lateral play, will be in use. The train will move practically as one body, the pressure and what little friction there is evenly distributed throughout, and any defectiveness of the roadway must either be very serious or must extend for a considerable distance in order to hinder progress or endanger safety. Supposing then that the sub-foundation, whether consisting of earth, stone cement or pillars, has disappeared in the space of 15 feet, that is only one-fourth the length of a car sixty feet long. If the supporting parts were entirely removed, the downward movement of the car could only amount to a fraction of an inch, because of the supporting couplers, and the whole structure will yield a little without danger of breakage in any part.

It is now proposed to point out some of the conditions under which existing railroads are constructed and operated and the natural forces and difficulties against which they contend. In doing so, I will incidentally make comparison favorable to the proposed new form of construction.

Many and varied comparisons could be made, all to the advantage of this construction, some of which would occur to the practical mind even without being specified, others easily understood when pointed out. One of them relates to the resillient bearing whereby the sidereal motion and shock are obviated. The two-rail roads employ springs under the cars for the purpose, with a fair measure of success; but it would be utterly impracticable to find any buffer which, attached to the flanges of the wheels, would withstand the immense concussion and friction to which they would be subjected. Nor would it be possible, for much the same reason and other reasons, to reduce or minimize the space left between the two rails for the free play of the wheels. The principal additional reason is that the same rails and wheels that are there used for support in motion are also the only reliance to check lateral action, whereas in the triangular monorailroad these functions are assigned to different parts, each performing a single function. The sole office of the under wheels is to support the moving vehicle. They have not the slightest lateral action. The only function of the horizontal rollers is to prevent and check lateral action. There is not the slightest downward pressure on them.

It is not difficult to understand the importance of resillient confinement of the horizontal rollers held by arms extending from the sides of the cars at the top, the same forming part of the framework thereof. The movement of a train so con-

fined is as noiseless and free from jolts as that of a bicycle on a polished pavement.

In the machinery of transportation there are three principal heads of expenditure: First, construction; second, maintainance; third, operation. The fixed charge for interest is here omitted, because it is a result of the others. The economic advantage of triangular monorail construction under each of these heads is very great, and cannot be either too much emphasized or valued.

Two-rail construction tries to accommodate itself to the inequalities and eccentricities of nature; and since the earth's surface constantly varies both in form and in substance, and is subject to frequent changes caused by weather conditions, rains succeeding droughts, freezes succeeding thaws, and the like, it is clear that the engineering problem constantly changes preliminary to construction and does not end upon the completion of the track. The mechanically constructed roadway obviates or minimizes these elements in the problem as in case of an ocean steamer of deep displacement ploughing its way unaffected by waves and winds, whereas a sailing vessel or a steamer of light draught is compartively unsafe and more difficult to control on its course. On the same principle that many articles can be made, not only in vastly greater quantity, but also of superior quality, mechanically than by hand, so a manufactured roadway is superior to one consisting of a combination of art and nature.

Of course the question of relative cost is pertinent and entitled to an answer. If it were a question of constructing only one short line of railroad and no more, the advantage of the monorailroad would not so clearly appear. It is different in contemplation of constructing long lines and many of them. If a house builder were asked for an estimate on ten houses to be exactly alike,

it would not be as much probably by fifty per cent as if the plans and specifications for each of the houses differed from those for all the others. So for a triangular monorailroad of a given car size enough of the parts for the whole world, or for a million miles, can be made from the same pattern and out of the same kind of material. It is true that grades and curves must be provided for; but arbitrary percentages may be established, and parts used in South America for a given grade or curve may be removed to the United States or Europe and put in use there. True, there must be some preparatory grading for a monorailroad, but it is trifling in comparison.

With the statement that the two-rail road is an excessively costly transportation machine, I concede the qualification that there may be sacrifices so great as not to be thought of, even in the interest of progress. At any rate the great through lines from city to city and their important branches, the investments in the construction of which, though perhaps uneconomical, have been made, will remain, at any rate for many years. But, broadly speaking, rail transportation as now projected and conducted is not profitable business. Else what is the meaning of the advance of railroad indebtedness, including as such both absolute obligations and stocks upon which the right is claimed to pay fixed dividends, to twenty billions of dollars and the constantly increasing burden of fixed charges, both out of all proportion to additional construction? The explanation, in general terms, is that the amount realized for transportation, vast as it is, is not sufficient to pay fixed charges of $70,000 per mile on 250,000 miles of railroad, that being the cost of construction and equipment, and an additional $7,000 per mile each year to operate. The investment, on a basis of $70,000 per mile,

aggregates $17,500,000,000, which at 5 per cent amounts to $875,000,000 as an interest or dividend charge. The aggregate operating cost is $1,750,000,000. These, added, constitute an annual expenditure of $2,625,000,000, leaving only $375,000,000 for repairs and replacements, to say nothing of dividends and new mileage, out of gross earnings of $3,000,000,000. The margin is of course inadequate. The margin is of course greater because the rate of interest was less when existing railroad indebtedness was contracted than at present.

Many thoughts occur to me on this great subject which I cannot here present. One of them, however, is worth exploiting to some extent. Transportation may be roughly divided into heavy freights, or freights in bulk, and light freights, or freight in small consignments. The form of structure we are now discussing is best adapted to the latter, and will sooner or later appropriate it. Of course, as now projected, it is advantageous to the railroads to carry the millions of small shipments of from fifty to a thousand pounds, but a much more economical arrangement from the standpoint of shippers would be to have the heavy traffic carried by existing railroads, and the light traffic by the lighter and less expensive method. Its advent will destroy the value of vast investments, but that is an inevitable result, just as happened to investments in water craft on our rivers and canals and to sailing vessels on the ocean. Many other illustrations could be given.

The triangular monorailroad is destined before very long to carry most of the passengers and nearly all the lighter forms of traffic, whatever the results to the present system or to the holders of railroad securities. The adaptability of electrical power in new forms, notably the storage battery, will hasten this result.

The most extensive and fruitful field still open to profitable investment, on a wide scale, is transportation. All know that in normal times the choicest investment securities are those of transportation companies, their business being quasi-public, and their control being equivalent to the power to tax. What they furnish can be produced at a uniform cost and is a common necessity. The business can be simplified, systematized and made to work almost automatically. Transportation is a cash business, for which, where there is a population, there will be found an ever present persistent demand which is constantly on the increase. And the people upon whom the whole burden and expense of transportation rest will not long endure a wasteful, variable, dangerous, or an unscientific system, when another that is economical, durable, safe and, in all important respects, superior, is available.

Looking at a railroad map of the whole country we find a very unequal distribution of the mileage. At least two-thirds of it is east of Chicago where much of it could be rearranged greatly to the benefit of shipping interests and some of it dispensed with. But it requires no statesman or political economist to see that there must soon be a change in the financing, construction and mechanism of railroads. Existing methods and systems are breaking down of their own weight. It is all too expensive and burdensome to be borne by railroad patrons, in which class falls every man, woman and child in the nation. Interest charges are fixed charges but dividends are not; and it is the latter which must yield. The full power to fix rates out of which dividends are paid really abides with the Interstate Commerce Commission, and various state boards and public service bodies, acting under legislative authority, though theoretically with railroad managements. The weakening of railroad credit, by which is

meant the diminution of borrowing capacity, which was whispered five years ago, has now become a loud warning, proclaimed from the housetops, by railroad officialdom. The moment the system of fixed dividends, put in force a few years ago, is found impracticable, the present efficiency of service will become a thing of the past, extensions and new constructions will cease, and repairs essential to quick transit and safety be neglected.

Soon after the railroads obtained a dominating position in transportation, the labor employed by them found itself poorly paid and reduced to dependence and servility. At length railway employees organized in self-defense, and have now turned the tables on their employers. The latter learned in 1877 and again in 1894 the serious meaning of a railroad strike. Meantime so many complications have arisen and special knowledge and familiarity with the business, to be acquired only by experience, have become so essential that for a strike by the operating force to occur would mean a complete cessation of the movement of trains. A reminder of enormous overhead charges and liabilities accumulating and maturing day by day, whether traffic moves or not, have caused the railroads, thus far, to yield at once to labor's demands, or to seek arbitration, and subsequently to yield in part. With increasing fixed charges and operating expenses on the one hand, and thorough organization of shippers on the other to force down rates and keep them down, the railroads find themselves between the devil of disappearing surpluses on the one hand, and the deep sea of successful opposition to an increase of rates on the other.

But this monorail system has nothing to fear from labor, organized or unorganized. In the work of construction there will be little for the dirt shoveller, the rock blaster, the mason and

structural iron worker to do. Nearly every piece will be made in shops and factories and shipped out on the part of the line already constructed and there put together by mechanics who cannot be classed as railroad hands at all, or if so, and they should strike, their places can be quickly supplied. As for those employed in operation, inspection, cleaning, oiling, etc., so few will be required for any particular line that the highest wages paid by the two-rail roads can be paid without being felt. Of course, the fact is that a new industry, such as this, will necessarily open the way to large additional employments for wage earners.

The simplicity of the triangular monorail is a feature the importance of which in its construction has been already referred to. But simplicity in its operation is not only an important but a conspicuous feature. The duties of the engineer or motorman are quickly mastered. No special skill is needed in performing any other service.

With reference to the rates for transportation to be charged, it may not be the policy of a monorail line to cut very deeply below the prevailing rates. But such a line will have the power, by reason of the cheapness and rapidity of its operation, to insist upon having all the traffic it can handle and can fix its rates at such figures as will secure that. Suppose, for instance, we have a monorail line from Chicago to some interior city of the third class, between which there are one or more two-rail roads. Without reflection one would say, the field is already occupied. But, in truth, it is not occupied at all at lower rates; and shippers would readily see sufficient reason for patronizing and sustaining the monorail line, for keeping rates down if for no better reason.

The railroad managements complain of many sources of trouble and peril to their interests and to those of investors in their securities. They

complain that labor conditions are drifting to disaster; that various authorities are imposing burdens and exactions which it is becoming more and more difficult to meet; that state legislatures are vying with each other in the passage of such legislation as full-crew laws and laws requiring hasty removal of grade crossings; that taxes are being onerously increased; that there is a tendency in legislation to compel each railroad to open its terminal facilities to other railroads having no legal or equitable right to share them with the owning company; that the Erdman Arbitration Act is well calculated to place railroads at the mercy of labor combinations; and finally, and as a result of this, that it is becoming very difficult to induce investors to provide the many millions necessary to supply adequate transportation facilities, and that the railroad companies are obliged to pay unprecedented rates for their capital requirements.

The truth of the matter is that the railroad as now constructed and operated is, in many instances, too expensive a machine for the work it has to do. While the moneyed capitalists of the world were credulous and optimistic on the outlook for railroad investments in this country (and were to some extent justified by conditions), while agriculture, manufacturing and mining were expanding and the people were acquiescent in high fares and freight rates, capital in large sums could be borrowed for the railroads at almost their own rates of interest. The stronger companies could then borrow for refunding or extensions at 3 and 3½ per cent. Under these conditions there were many unprofitable constructions and unwise duplications. But now under changed conditions, capital demands 5 and 6 per cent. and is hard to obtain at those rates.

Another important factor in the alteration of conditions, never specifically mentioned by rail-

road officials, consists in the new public and legislative view of franchises. The privilege of forming a corporation, of operating a railroad, of collecting fares and rates, of exercising the power of eminent domain, was formerly, and by some is still, claimed to be, in and of itself, property of great value irrespective of other values; and, because little attention was given to the subject, the claim was not generally disputed. But legislative bodies, commissions, and the public at large, have been studying, dissecting, analyzing, and have discovered that the term "franchise" as employed by railroad companies to signify a large intangible value to be added to physical values, merely represents monopolistic power. To this awakening to the true situation is to be attributed much of the hostile legislation and stubborn resistance to railroad expansion of which railroads and financiers are now complaining.

Every part of the trackage, rolling stock and equipment for this railroad can be made to order in a shop and hauled out on the finished road and put together on the ground. It dispenses in large part with gangs of men, grading, excavating, ballasting, spiking, levelling, etc., which are indispensible in the construction of a two-rail road. In case of the latter the two rails must be maintained on an approximate level with each other, requiring constant labor, watchfulness and expense which continue after the work of original construction has ended. The support must be inspected, to see if it is strong and sound, every day and night in the year. The evenest of two-rail tracks constantly becomes more and more uneven, that is to say, keeping the two upon an exact level with each other at all points is an utter impossibility. And every point of divergence means a swerve for the whole train to one side, an awful friction with the grinding off of more or less of the steel from both flange and rail. But before that

swerve is ended there comes another and another as each unevenness is reached. So the whole train on the very best of tracks with its ponderous engine is kept oscillating from side to side, without uniformity and beyond human power to anticipate or regulate. You may have become so accustomed to the endless succession of indescribable swerves and jolts when traveling on trains as scarcely to notice them. But, consciously or unconsciously, all passengers are affected by them in their nerves and otherwise; and few people ever start on a trip of any length without apprehensions regarding their safety. Many are actually made miserable and ill by the ever present dread of accident. Just think of the immense structural strength required to stand the constant jerking and wrenching of the engines and cars. Two-rail cars, whether for passengers or freight, are constructed with more regard to hard usage and heavy strain than are warships built to encounter heavy seas, steel projectiles and dynamite blasts. Several tons of iron enter into the construction of each car, the mechanism being intricate and costly. And emphasis may be here very properly placed on the frightful and increasing cost of the power to operate railroad trains in the present way. The immense tonnage of iron in cars and engines in a train will average about five times what will be required in a monorail train of the same relative capacity, operated under these patents; and the fuel, consumption and waste of power will be trivial in comparison with that of those now in use.

The running of heavy trains at high speed on two rails is unscientific as well as dangerous, unless the foundation be firmer and the relative adjustment of the rails be more perfect than financial resources now available will admit of. The laws of nature cannot be suspended by man's contrivances. They must be overcome by mechani-

cal exactitude, as in the triangular structure. A bed of broken stones mixed with earth under a wooden tie has not resisting power equal to the pounding of a drive wheel under an engine weighing thirty tons or more and drawing a long train of cars heavily loaded. Naturally and inevitably, moisture softens the mass. Then the first engine to pass over depresses the end of one or more cross-ties, and though that train may pass over without derailment the next train lurches powerfully to one side, the chances being many to one that spikes will be pulled out or the rail or flanges broken, and the train, or part of it, ditched. But in railroad nomenclature the true cause of a derailment is seldom stated. It is said that the rails spread. Now there is really no such thing as a spreading of the rails. What generally happens is that, beginning with a weakness, an unevenness develops which immediately grows by a repetition of the force which created it until a catastrophe results. Those who have charge of railroad construction and maintenance know, though they scarcely dare admit it, that the only preventative of accidents is approximation to a spirit level track having an unyielding support of stone, concrete, masonry or a continuous sill, and that the cost of such a foundation for a two-rail road, without the co-operation of a still more expensive superstructure is prohibitory.

The steadiness of the cars in motion in the triangular structure will have even stronger guarrantors than the force of the side rails and side rollers. The cars will be joined together with safety couplers, carried two in number, in the rear platform of the car in front to automatically slide into holders sprung open by the impact when the two car ends come together. (The couplers are not shown in the drawings). The couplers and their receptacles will be constructed so that

they will have only very slight perpendicular play, and only enough lateral play to admit the turns to be made in passing over curves. In this way any swerve of the car to either side will be checked by the weight of the entire train before it can amount to as much as half an inch. Thus also any inequalities in the distribution and adjustment of the load will be neutralized, or become a matter of no consquence. Any suggestion that evil might result from creening of the cars because of unevenness of the load, or from any other cause is thus answered. The couplers will be firmly held and of ample strength to hold the cars and train straight together in case of breakage of either a supporting wheel or side roller.

Another comparison can be here again made to the great advantage of the monorailroad. The characteristic of a rigid frame made of parts of uniform dimensions is entirely absent from the construction heretofore in vogue; and because of the resulting unevenness of the roadway it was wholly impracticable to establish a rigid connection between the different cars of a train. To avoid the constant breaking up of the train the couplers had to have considerable perpendicular as well as lateral play. Each car was a distinct and separate moving body dragged along after the engine or the others subject to such of its own vicissitudes in the way of swerves and jolts as might fall to its lot. But, here, the engine and tender (where one is required) and all cars will move as one mechanism, or as if they were the same vehicle any little tendency to creen in one part being offset and checked by a little creen in the opposite direction in another part; any undue part of the load on one side of one car counterbalanced by a reverse condition in some other part; any undue sidereal pressure which might otherwise result seriously, from any cause, being borne, not altogether at the point where it occurs,

but being distributed throughout the whole length of the train, and even along a much longer distance.

We next refer to the cost of maintenance or upkeep of the existing system, and further, as closely connected with that, the question of relative safety. In justice, it must be said that railroad officials do all they can to safeguard their precious consignments. It would be absurd as well as cruel to charge that those in railroad employ, whether officials or subordinates, ever wilfully designed and planned that an accident should occur with its sad results. The accidents result from inherent insufficiency of the mechanism employed.

The scarcity and high cost of ties is even now a very serious problem, the solution of which is not in sight. It is therefore only the lapse of a little time between the abandonment of the present form of transportation structure, and change to another. The people will not submit to a further increase of rates, and when it becomes more dangerous to travel in a passenger train than to join the army in a time of war there will be a marked contraction in the volume of passenger traffic.

Attention may, in this connection, be called to another marked advantage of this plan. A train on two rails, encountering an ascending grade, soon loses its momentum and draws on the engine for an enormous traction and lifting power. That is because of the friction and oscillation of the cars and engine, phenomena which are entirely absent in a monorail train. For the same reasons this plan will admit of much steeper grades than are possible for two-rail roads. Owing to the negligent element of friction and oscillation, momentum will be lost very slowly, and will be sufficient to carry the train to the top of grades which would not be deemed possible in a two-rail road. Here

we have also another important element to be counted in when we consider comparative costs of construction.

The great element of safety of the present invention is the contrivance for placing the train while in motion under complete mechanical control, in lieu of that of unforeseeing human agents. A moving train on two rails without any superstructural guide or control runs by an inanimate force only partially and imperfectly regulated and supervised by the minds of men. True the speed can be to a great extent controlled by the engineer, but it oftener happens than otherwise that the brakes serve no useful purpose. A large percentage of the accidents result from broken or defective rails and switches, totally unforeseeable. The train now in use on two parallel underlying rails is like an unbridled horse pulling a loaded carriage through a lane. His speed may be accelerated by use of the whip and checked by use of the brake. But regulation and control to prevent accidents can go no further. The train to be in use under these patents will be the same horse bridled, check-reined and kept under complete control, with mechanism in addition which render its swerving to right or left from the safe road utterly impossible.

A striking advantage of the triangular monorailroad, but difficult to classify, is its mobility. When a two-rail roadway has been surveyed and graded and the bridges, tunnels and trestles have been built, and it is later found that a more feasible route exists between given points, or it is desired because of increase of traffic or expense of operating to avoid steep grades or curves, or to shorten the route, or to abandon it, regardless of cost, nearly all the construction work on the original route is a total loss. But a monorailroad can be taken down and reconstructed elsewhere in short order and without loss of material. The

only loss is that involved in taking it down, removing it, and putting it up again. This is because of uniformity in sizes, lengths, etc., of the parts used in it. Even the supporting posts and bridge work can be used again.

This introduces the thought that a great field of usefulness and profit opens to this invention in supplying strictly local and proprietary service. An individual enterprise distant two or three or several miles from the nearest point of shipment by rail or water could by the expenditure of a few thousand dollars provide itself with this type of railroad on a diminutive scale and cut off a great drain on its revenues in the form of cartage over bad roads. And there are many advantageous sites for productive enterprises not at present utilized but which might come into use if only the problem of transportation were solved. There are many gold, silver and copper mines of low grade, or comparatively low grade ore whose owners cannot construct branch lines of two-rail road to smelters and reduction works. And there are other undeveloped enterprises which cannot be developed because their owners cannot on account of the roughness of the intervening surface, afford the expense of constructing and operating two-rail tap lines, and because haulage in carts or wagons is out of the question for the same reason. All such could construct a line with small triangles and cars to match, using either small steam engines or electricity developed in many such cases by water power close by. The same may be said with equal force in cases of iron and coal lands, timbered lands and farming sections. Let's just think of the thousands of farming communities, not only here but in other countries, some a few miles and others many miles from any existing means of transportation, and then let us open our eyes to the advantages to them of one of these lines, even if it were

roughly constructed and best fitted for carrying freight only. There are many single farmers who would find profit in constructing one or two or a few miles, if only for individual use. For all such uses, aside from long distance transportation, this invention will prove to be a great developer, economizer and producer of profit.

Great utilities of this monorailroad will be developed in municipal transportation. In the local transfer of freight, including merchandise of all kinds, the wastes of present methods are simply appalling. In addition to the wear and tear and constant breaking down of vehicles, and other immense wastes which need not be named, the ruin of pavements, the constant repairing of which is a great burden to taxpayers should also be considered.

What is elsewhere said about the tendency of trains on a two-rail road to wrench apart the parts of bridges is equally applicable in the case of elevated structures in the streets of cities. Because of the lurching and oscillating action of the cars these must now be constructed with greatest attention to strength and durability. The supporting pillars have to be sufficiently wide apart to withstand the impact of a number of heavily loaded cars loosely coupled together and moving swiftly. If the supporting structure were only so wide as, or only a little wider than the track it would be in constant danger of toppling over with serious results. Consequently, the double track elevated line now in use occupies the whole width of the street. It shuts out air and sunshine and its noise is distressing and tantalizing.

It is not necessary to elaborate all the points of advantage possessed by the elevated monorailroad. It has its own continuous framework, separate and apart from the supporting structure. The continuity of the triangular frame and the

even distribution of the impact reduces to a minimum the sidereal pressure; and because of this and other peculiarities of construction, a description of which need not be reiterated, there can be no lurching from side to side. If the frame be strengthened as for crossing a ravine, the two uprights, one on each side and a cross-beam under it every 100 feet will make a safer structure than the cumbersome nuisance now in use. This means a structure not more than 12 feet wide, or 24 feet wide for a double track, interfering with the use of the street only to the extent of two posts set opposite every 100 feet on each side of the street. This on a street 75 or 100 feet wide would be scarcely noticeable. And the operations of trains with this system will be almost noiseless.

In the whole country there are 250,000 miles of railroad, without counting switches and double tracking, whereas there is persistent clamorous demand for three or four times that mileage, in territory which would furnish volumes of passenger and freight traffic which would be immensely profitable to lines constructed to operate the triangular monorailroad system. The adaptability of it, as above shown, to traverse rolling or swamp country on cheap structures, and the facility of converting it into a bridge by the mere addition of a few stanchions and cross-beams, is a feature not to be overvalued. There are a vast number of towns, villages and fertile farming sections in every part of the country and in every state which would otherwise continue without railroad facilities for a quarter or half century, or permanently, which will not only welcome the advent of the monorail, but will gladly provide the funds to construct it.

It only requires a little reflection to understand why the construction, original cost, and cost of maintenance are so immensely in favor of the

monorail. In a two-rail road, in order to maintain an approximate correspondence between the rails, cross ties must be laid close together, and not only their immediate support but every square inch of the substructure upon which the cars rest or move must be solid and unyielding. This often necessitates digging down to bed-rock for a foundation. With the monorail, we use the continuous sill with the advantage that every inch of that upon which the wheels run has under it a perfectly level and solid support. The sill and rail, in close contact, give a sub-support and steadiness superior to that to be found in any two-rail road. Instead of having a continuous succession of cross-ties, one under each of the triangles, ten feet apart, will usually suffice. It should require no mechanical engineer, nor even a mechanical mind, to realize both by original conception and comparison the inherent strength and resisting power of such a structure. The lateral pressure, as has been shown, is negligible in comparison with that of the two-rail road. But note how it is distributed and held in check. The sidereal force has substantially no space in which to gain momentum, and whatever of such force is created will be distributed along the whole length of the train and borne by the entire structure for the same distance, and for an indefinite distance beyond in both directions, whereas in other railway construction each foot of the driveway upon any instant may have to meet an impact from enormous weight with swift projection, giving it terrific momentum.

How about bridges? In the triangular structure the pressure is all in the middle, straight downward, without any of that fearful impact of drivers, trucks and wheels butting from side to side and wrenching the parts of the bridge structure apart. You have no doubt noticed the succession of great cross beams and uprights of

massive steel in railroad bridges. Nothing weaker could withstand the butting of engines and loaded cars of many tons weight. The difference when there is no lateral motion, the weight being evenly distributed the whole length of the train and moving ahead in a straight line is obvious.

Again, there is scarcely any limit to the age of usefulness of the car wheels and rails used in this monorail road. As there is no lateral motion, there is none of the severe friction and grinding away the surface of both rails and wheels which send thousands of tons of the finest steel to the scrapheap every few months in the case of every great railroad system. The upkeep from this cause alone costs the railroads many millions of dollars annually. Whatever the motive power may be, whether electric motors or steam engines, it will rest and move on driving or supporting wheels proceeding in single file and have the same side supporting rollers as the cars.

A careful estimate has been made of the cost of construction ready for use. One hundred miles through undulating or slightly mountainous territory can be constructed as above described for an average of $5,000 per mile, with all the material paid for and put in place. Good cars fully equipped for passenger service can be built for $500 each, while sufficient steam engines will cost $1,000 to $1,500 each. Freight cars will cost $100 less each than passenger cars.

The question of the rate of speed must be addressed to the judgment based upon the individual's knowledge of natural causes and effects, aided by a comparison of structures, mechanisms, and speed records now available. The keeping up of a two-rail road to the condition permiting 50 to 60 miles an hour is so expensive that only companies as strong financially as the New York Central and Pennsylvania and Union Pacific (for part of its line) can afford it, the labor and ex-

pense being attributable to the causes and natural obstacles before described. But the laying of one rail on one continuous sill in a straight line, the constructing a series of triangles of exactly the same dimensions and placing two grooved rails within them on an exact level with each other presents no difficulties. There is no reason for doubting that a speed of 100 or 120 miles an hour will eventually be found to be feasible and safe. Of course great care would have to be taken in workmanship and selection of material where such great speed is contemplated.

How about curves? Here again resort is had to comparison and illustrations. The two-rail road must, in order to limit the cost within capitalistic possibilities, adapt the road bed largely to the irregularities of the earth's surface as it finds them. If the surface condition calls for a three or three and a half per cent. curve, the construction will have to conform to that condition. If a succession of small per cent. and large per cent. curves are called for, the line must be curved accordingly. But the monorail structure, being a continuous framework securely knitted together and constructed entirely according to mechanical design and direction, of equal spaces, sizes and dimensions throughout, might, if necessary, be laid in a straight line from one slight elevation to another without any grading whatever, resting, where the distance is considerable on posts or piling. Of course, there will have to be curves; but these will be constructed arbitrarily, for instance, 10 per cent., 20 per cent., 30 per cent., and 40 per cent. curves. There will be none intermediate. The structural parts will be made for these in the construction shops with arithmetical and mechanical precision.

The disposition and tendency of people is to come closer together in their minor business affairs, to deal directly with each other through

such means of rapid intercourse as are available, to eliminate the middle man. This is seen in the organization in many sections of farmers' marketing associations on the one hand and consumers' leagues on the other. An enormous volume of merchandise is now sent out from manufacturing centers by mail. Especially is this true since the establishment of the parcels post. A much greater volume still goes by express, notwithstanding the slightly cheaper parcels post rates. Many express and mail cars fully loaded with light packages to serve this direct trade are run daily over the various railroad lines. Whole trains of lighter and speedier monorailroad cars could be employed to distribute this light but profitable traffic over main lines and innumerable branch lines. No greater accelerator of the new phase of modern business above mentioned could be conceived of than this invention which opportunity comes to meet it.

This system admits of a variety of construction. It can be constructed adaptably to the character of the traffic, and rate of speed desired, and almost to correspond with the means of the constructor. It can be constructed for the use of cars as commodious as those used by the two-rail roads, though construction of such magnitude would seem to be sheer waste, in view of the fact that there can be no serious delays on lines operated under these patents, nor is there any limit to the number of cars and trains that can be kept in operation. On the other hand diminutive structures and cars are just as practicable as those of larger size, with almost an exactly proportional decrease of cost. But lines may be constructed for specific uses very cheaply. Suppose it were desired to construct a line into any city from an interior section one or two hundred miles distant, to do strictly a local business, and a speed of 20 to 25 miles per hour would answer

the purpose just as well as a greater speed. In that case the side supports might be of almost any kind of seasoned timber, the inside being lined with, and the ends sheathed in sheet iron and the triangles could be placed further apart than in structures for other uses. The cars might be lightly and cheaply built. Suitable cars for light traffic can be constructed in a shop having suitable facilities for from $200 to $500 each, according to size.

Not only does uniformity of all parts but comparatively small cost of the materials conduce to moderate cost of the completed structure. A supporting rail of comparatively light weight will be sufficient, since its strength is reinforced by the sill with which it contacts at all points. There is no friction whatever on the rail, only downward pressure, and except that iron or steel is the cheapest of metals for the purpose, it would answer every purpose if made of any kind of hard metal. And exactly the same remark is applicable to the side rails. All the rails of all kinds for a given distance will cost a great deal less than one of the rails now in use, and, instead of having to be frequently renewed will last indefinitely. What is here said of the rails is also true of the other metalic parts. Nor need anyone be seriously concerned as to the cost of the wooden parts. There is in many countries an inexhaustable supply of the kind of timber best adapted to this use. Carefully shaped and hewed timbers used for cross-ties on two-rail roads are expensive and scarce. But sawed lumber, such as will answer for the monorailroad, is abundant and can be cheaply produced.

IN THE INTEREST OF PRACTICAL CONSERVATION.

I am encouraged by the profuse utterances of statesmen of large and small importance to be-

lieve that the prevention of waste, which is another name for conservation of the raw material of production, is not a mere political fad but a matter for serious concern. But to save what natural forces have for ages and centuries exerted themselves to produce addresses itself to the self-interest of all public service enterprises, as a direct concern of today, because the value of it all necessarily reaches over far into the future. What was stated above, bearing upon economy, in point of quantity, directly raises the question, not merely whether the existing system of railroad construction and operation can compete with the new form, but as a conservation question, whether it can continue in existance at all. Does our knowledge that the exhaustion of accessible supplies of iron ore and of tie timber is in sight, and must be faced as a stern reality by this generation, lend encouragement to the railroad demand for a progression increase of railroad charges to pay for new construction and extensions of the present system? Should not all interests, whether popular, capitalistic or governmental, encourage the introduction of machinery for transportation which will conserve resources, cheapen the carriage of freight and passengers, and intensify agriculture?

The difference in freight charges of a few cents per hundred often signifies a great advantage on the one hand and disadvantage on the other. Sometimes it spells the success or failure of an enterprise.

IMPORTANT USES OF SMALLER TRIANGLE.

The super or smaller triangle has been referred to incidentally in describing the structure. That is by no means a mere appendage, nor is it merely ornamental. In addition to giving ample strength to the structure, its adaptability for telegraph and

telephone wires and power transmission are entitled to very serious consideration. And it should not be overlooked that it may be roofed, without detriment, but greatly to the advantage of the lower parts while in use for purpose of transportation. Its superiority in convenience, economy and efficiency over prevailing supports for wires and electrical conduits need only to be mentioned to be fully understood and appreciated. The same difficulty that confronts the two-rail roads in the matter of timber or ties confronts telegraph and telephone companies as to poles for the support of their long-distance wires. They should, and doubtless will, welcome the advent of the triangular structures as a ready and simple solution of a problem, the solution of which is not in sight.

But perhaps the more valuable use of the smaller triangle will be as a support and retainer for the transmitters of electrical power. We need not, however, enter into a detailed discussion of this use.

This may be also used exactly as the lower part. It may be fitted up with the same additional parts and appliances for the transit of cars through it, and these may have their independent production of motive power which may be freely used without hindrance or interference with the operation of the main structure. There is no doubt that it may be fitted up with such exactitude of detail that electrical cars and trains of such cars can be run therein for short, or even for long distances without the immediate attendance of any human agent. The space therein can be completely isolated, insulated and enclosed, because not connected in any way with the use of the principal structure. Nor would the running of such cars and trains therein interfere with the utility of the main structure for its specified purposes. But the small cars could be

electrically sent through it at great speed if constructed of steel of small body and with wheels and rollers of adequate diameter.

The project of a pneumatic tube from New York to Chicago for quicker transmission of first class mail and light parcels has been sometimes discussed. It would seem that here is a chance for the early and cheap consummation of that scheme, and not only between these cities but between many cities and towns, and locally as well.

National interest in the uses of this part of the structure can be considered without entering upon a discussion of the general subject of governmental ownership. Whatever may be thought of a general system of government owned railroads, it is only a question of time when the United States must be freed from dependence upon private corporations in the transmission of messages. The advantage given by advance information to individuals and corporations for speculative uses has often resulted disastrously to those deprived of access thereto, continually defeats justice and neutralizes or paralizes the efforts and functions of government in domestic affairs. There have been and will again arise occasions when the preservation of secrecy in military and diplomatic communications is of vital importance to all the people, and upon such occasions no one should be entrusted with secrets of State except trustworthy public servants. We have never had a foreign war of any consequence since the use of electric wires as a means of communicating intelligence was begun. All the other great nations either own the telegraph lines as parts of their postal systems, or exercise control of them equivalent to ownership. In case of war with any formidable power, our country would be at a ruinous disadvantage, because of its having to proceed openly and in plain view

of an enemy planning in secret and executing destructively. It only requires experience to convince one that there is no such thing as secrecy for any thing now entrusted to telegraph or telephone wires, if it be valuable, either as a news items or for other purposes.

GENERAL SUGGESTIONS.

The foregoing would seem to suffice, even concerning so important a subject as this, but one's enthusiasm is often responsible for his saying more than the disinterested reader might concede to be necessary. Hence a few observations of a general character.

There are always a few who know a good thing when they see it. These few are the lords of finance and the industrial magnates of our time, largely because they were able to see, and not, as many suppose, because they have been lucky or were singled out for special favors. They were not the men who nursed prejudice and disfavor for any new thing, merely because it was new.

To prove that this presents a rare and exceptional opportunity for enormous realization, I need not claim that the monorail system will entirely supercede the two-rail system, in the near future or ultimately, whatever my belief may be. But is there not an almost limitless field between the cumbersome and unwieldy two-rail system and minor forms of transportation for an intermediate form, costing to construct and operate less than one-tenth the cost of construction and upkeep of the forms now in use? A survey of the United States alone, as bearing on this question, would show needs which could be profitably supplied by the monorailroad to the extent of a million miles, not only without disturbance of any established methods of carrying on the country's transportation and business, but greatly to its increase and acceleration.

The fact should not be overlooked that the invention is basic and unique. There never was before, and probably never will be again, a patent issued to cover an entire system of transportation. The original patent has now less than sixteen years to run but will be kept alive for an indefinite period beyond that by patented improvements, one of which has been already granted of date July 28, 1914, and constitutes appendix B hereto.

The fortunes of many men were due to the power to discriminate between the ordinary and exceptional. Too often we pass judgment on an offer embodying a patent without such discrimination. A patent, like the concrete result of any other mental effort or financial investment, is either of no value or of great value. A patent should be tested as to its value by the answers to three questions. (1) Is the work it will do valuable to a large class? (2) Is it comprehensive; in other words, is it capable of doing its work independently of other machines, and not as a mere auxiliary? (3) Can its owner, having the capital, proceed to put it to use, and keep it constantly in use, without waiting upon the pleasure or convenience of others? The relevancy of these questions is seen in the answers. (1) Many patents are merely ingenious or novel methods of performing service required by a few, or even if by many, only occassionally. But every person in every country requires quick transportation, all the time. (2) Small inventions, many illustrations of which might be given, are only parts of larger mechanisms, or appendages of other conveniences, hence are dependent upon acceptance and adoption by others, or upon their whims and caprices. But nobody's convenience or interest has to be consulted when any one with the capital in hand, has selected a route and mecha-

nism of cheap and rapid transit. (3) The profitable use of transportation machinery can only be interrupted by the act of God or the public enemy, whereas many other patented conveniences are only in demand at certain seasons and are liable at any time to be laid aside because of economic or social changes not anticipated.

The annual products of patents actually sold in the United States aggregate the enormous sum of $25,000,000,000. No one has attempted to estimate the value of the patents themselves.

I consider this patent to be an inexhaustible gold mine, all above ground, and I think I only have to painstakingly call the attention of capitalists to it, in order to insure its success. But the realization of profits for myself is the least of my motives for the foregoing presentation. My principal desire is to see the triangular monorailroad in general use, contributing to public convenience and welfare.

Appendix A.

UNITED STATES PATENT OFFICE.

THOMAS CARL SPELLING, OF NEW YORK, N. Y.

MONORAILROAD SYSTEM.

1,058,481. Patented Apr. 8, 1913

Specification of Letters Patent.
Application filed November 14, 1913. *Serial* No. 731,303.

To all whom it may concern:

Be it known that I, THOMAS CARL SPELLING, citizen of the United States, and resident of New York city, in the county of New York and State of New York, have invented certain new and useful Improvements in Monorailroad Systems, of which the following is a specification:

The present invention relates to monorailroad systems and has for its object the provision of a durable, practical and cheap construction, readily assembled wherever desired, and comprises generally speaking, a frame-work of strong rigid character consisting of a plurality of open frame members associated to constitute a way therewithin in combination with a car adapted to travel within the said way, and simple and efficient instrumentalities for mounting and securing the frame and associated track members, etc., to the ground or other surface over which the system is to be laid.

The invention also has for its purpose to provide a monorailroad system wherein the trackage construction will comprise but few parts, to the end of utilizing the enormous energy which is now wasted in the existing systems of railroad construction; one which will effectively guard against all liability of derailment of the cars; and which may be supported by suspending cables for crossing rivers or ravines. And it is further proposed that the design of structure will be such as to permit of the same being erected with dispatch, and wherein the cost of manufacture will be comparatively small.

The invention has for its further purpose to provide a type of car especially adapted to this system wherein the supporting or carrying wheels thereof are provided with means for preventing possible derailment; and which is provided with means to steady the car in the event of the same losing its equilibrium while in motion; to minimize

oscillation and to support the car in erect position while the same is stationary.

Summarily stated, the invention proposes a system of railroad which will by its simplicity of construction and principle of operation readily suggest itself as the most practical type of conveyance where speed and safety of movement are paramount; and for installation in countries which are not by their natural characteristics suited to ordinary railroad construction such for instance as mountainous countries and countries which would otherwise require considerable bridge erection to introduce the present method of railroad building.

The invention may also be used in subways in large cities or may be constructed in various other ways to suit traffic or geographical conditions.

To these ends the invention consists in the novel details of construction and combination of parts more fully hereinafter described and particularly pointed out in the claims.

Referring to the accompanying drawings, forming a part of this specification in which like numerals designate like parts in all the views:—Figure 1 is a transverse sectional view of the trackage construction, and showing a type of car employed and Fig. 2 is a side elevational view of the same.

Referring to the construction in detail the railroad construction consists of a suitable bed comprising masonry or other suitable bases 1 and 2 disposed in parallel relation, and an intermediate masonry or other suitable bed 3 which is countersunk to receive a continuous sill 4 of wood or other suitable material for the continuous track 5 which is secured thereto in any proper manner.

The frame-work of triangular design in cross section is constructed to inclose the monorail and provides in effect a conduit for the cars. The frame-work consists of angularly disposed beams 6 and 7 connected at their lower ends by the reinforcing plates 9 to the bottom cross bars 8 which bars from the base of the triangle and are also securely held embedded within the cross ties 8 and adapted to underlie the track 5.

At their respective upper ends the beams 6 and 7 are connected and reinforced through the medium of triangular plates 10 and intermediate supporting bases and their respective connected ends; said beams are further reinforced or braced through the medium of cross bars 11 and plates 12 secured respectively to the bars 6 and 7.

A pair of horizontal grooved rails or tracks 13 connect the several beams of the respective sides of the structural framework and have for their purpose to cooperate with means carried by the car is stationary and

to minimize oscillation in movement as will be understood.

The car 14 is of substantially triangular design in cross section to conform with the passage-way provided by the structural frame, and at either end thereof has journaled thereon a supporting wheel 15.

The supporting wheels 15 are each mounted in a pair of journal boxes 16 secured to the underside of the car floor 17 on a relatively short axle 18, and the journal boxes of each of the axle bearings are readily accessible at all times through the medium of suitable openings which are, under normal conditions, closed by the hinged plates 19. The wheel 15 is of the double flange type to the end that the same will readily hold to the track under all conditions of travel of the car.

A pair of rollers 20 carried by the car are adapted to engage with the side grooved rails 13 for the purposes above mentioned, and each of said rollers 20 is journaled in a bifurcated arm 21 which is in turn mounted to have movement on the side of the car, and a spring 22 which is mounted on the arm normally tends to hold the roller in engagement with the track 13 with the required friction.

From the foregoing description it will be apparent that applicant has provided a construction wherein the strong, rigid characteristics of the triangle are obtained, such triangle including a bas bar secured to the foundation or bed or cross ties, as the case may be, and the converging side members being directly connected together at their upper ends, furnishing a device complete in itself and independently of the bed or foundation of which the triangle is fastened. Through the medium of the cross bars 11 and the lower corners braces 9, the middle portions of the side bars of the triangle are greatly strengthened to resist the outward pressures or strains incident to the lateral bearings carried by the car contacting with the rails 13; also that the manner of seating the base bar of the triangle in the wooden cross tie with the latter in turn seated in the longitudinal wooden sill upon which the rail 5 is supported, constitutes an efficient and highly practical manner of securing the triangular frames to the base or foundation, it being understood that the longitudinal sill and cross ties may be placed as desired in keeping with the conditions surrounding the particular service at hand and the nature of the surface over which the system is built.

Many changes of construction and arrangement may be made in the device as above explained without departing from my present invention, and I do not limit myself to the details and modifications herein shown and described.

What I claim is—

1. In a monorailroad construction, a triangular frame, a supporting bed therefor, the said frame including hori-

Fig. 1.

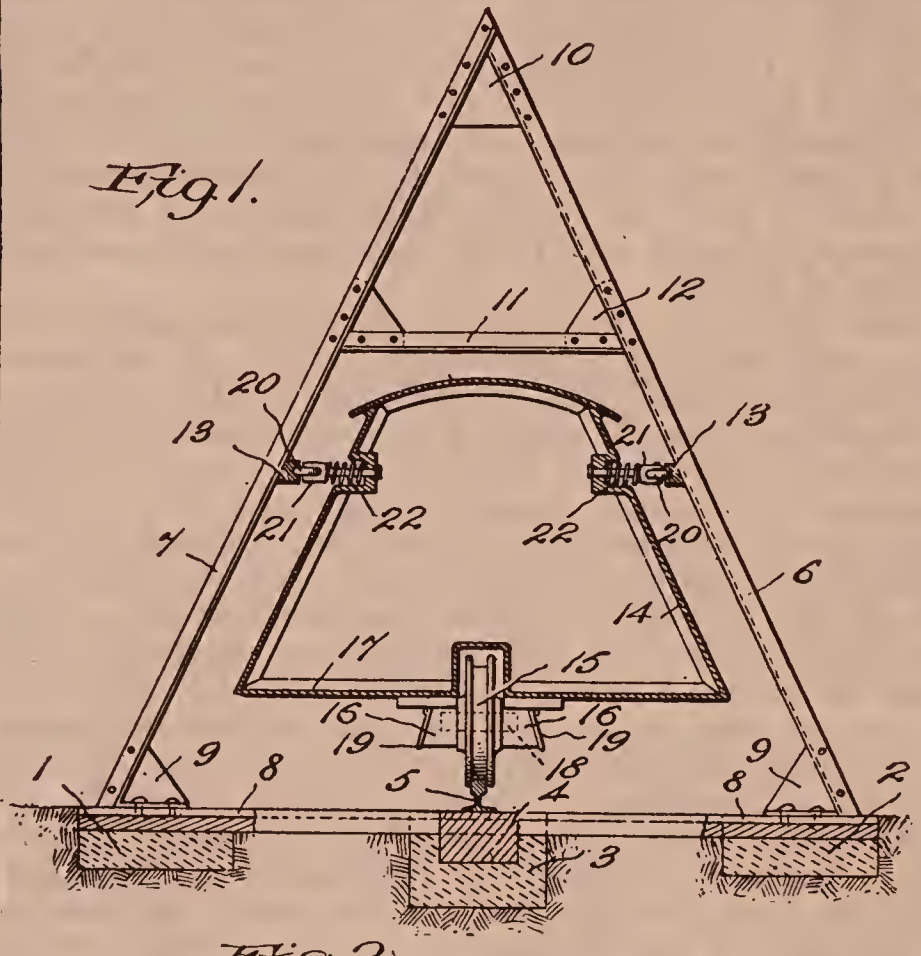
10
11
12
20
13
21
13
22
22
20
7
6
14
17
15
16
16
19
19
18
1
9
8
5
4
8
9
2
3

Fig. 2.

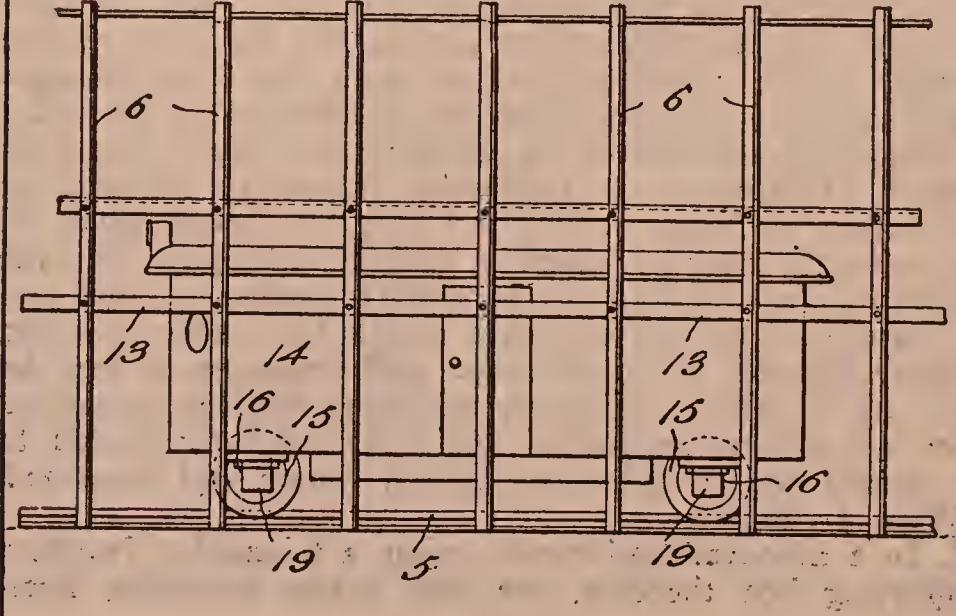
6
6
13
14
13
16
15
15
16
19
5
19

FIG 1

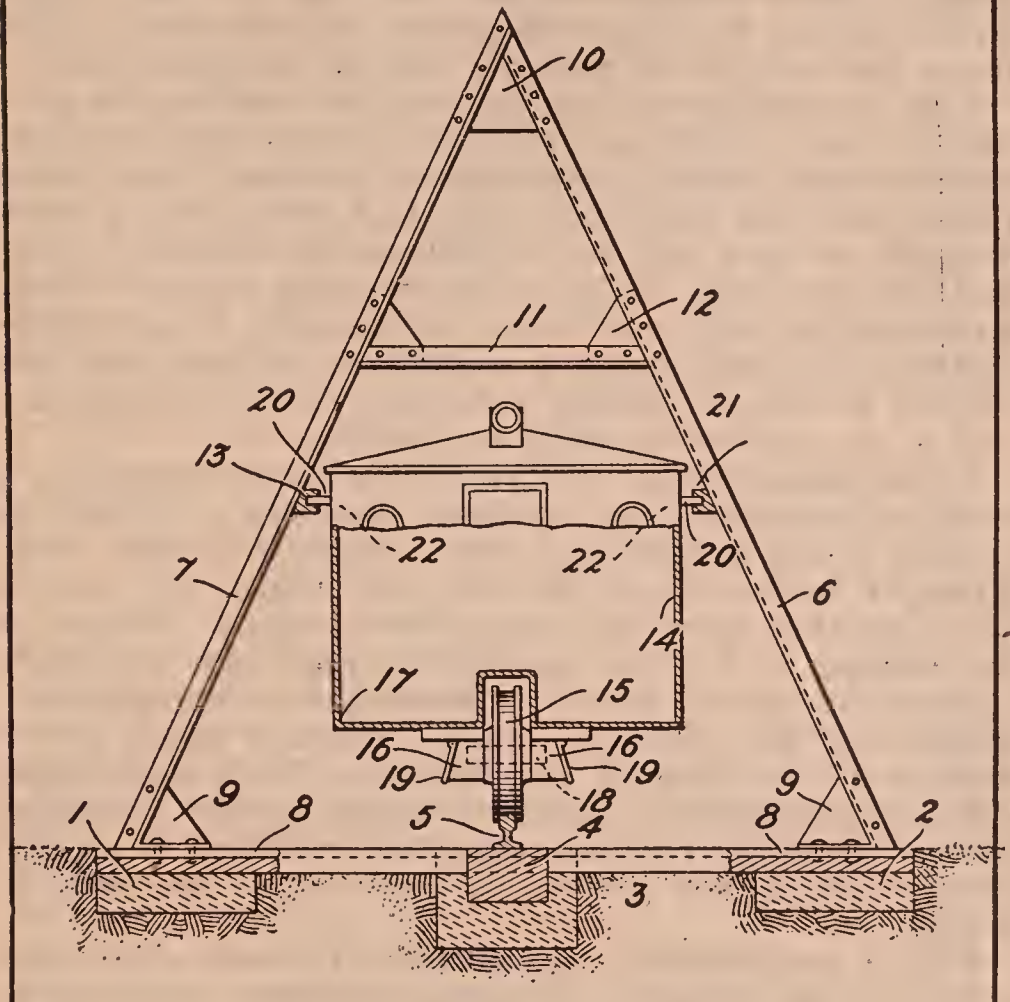
10
11
12
20
21
13
22
22
20
7
6
14
17
15
16
16
19
19
18
9
9
1
8
5
4
8
2
3

FIG 2.

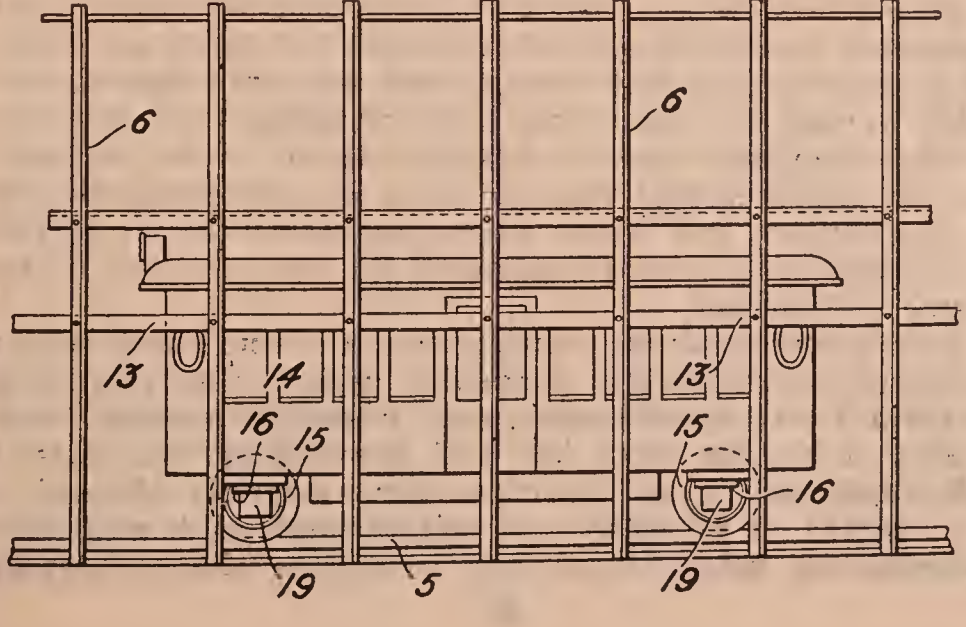
6
6
13
14
13
16
15
15
16
19
5
19

zontally-disposed bottom cross-bars secured to the bed, a continuous sill forming a part of said bed and provided with a fixed rail, a triangular car located within said frame and having straight walls spaced equi-distally from adjacent portions of the frame and provided with alined supporting wheels mounted to travel on said rail, and means on the car for traveling engagement with the sides of the frame and operable to maintain said car in equilibrium.

2. In a monorailroad construction, the combination of a suitable bed supporting cross ties, a traveling car, outwardly thrust bearings at the sides of said car, a continuous sill on said bed associated with said cross ties, a track mounted on said sill, and a framework comprising connected bottom and side bars also mounted respectively on said cross ties and providing a substantially enclosed passageway, and rails mounted respectively on said side bars adapted to engage with the outwardly thrust bearings carried by the car, substantially as described.

3. In a monorailroad construction, a frame comprising a series of approximately triangular members so related as to form a way therethrough, each triangular member comprising a bottom cross bar and converging side bars, a rail supported upon the cross bars centrally thereof, a car adapted to traverse said rail through said way, rails opposite the sides of the car connecting the converging side members of the triangular frames together, means at the sides of the car engaging said rails to assist in maintaining the car in equilibrium, and cross braces for the triangular frames connecting the converging side members at a point adjacent to the car and above the rails at the sides of the car.

4. In a monorailroad construction, a frame comprising a series of approximately triangular members so related as to form a way therethrough, each triangular member comprising a bottom cross bar and converging side bars, a rail supported upon the cross bars centrally thereof, a car adapted to traverse said rail through said way, rails opposite the sides of the car connecting the converging side members of the triangular frames together, means at the sides of the car engaging said rails to assist in maintaining the car in equilibrium, and braces extending across the corners of the triangular frames to maintain the side members of the frame in position.

5. In a monorailroad construction, a frame comprising a series of approximately triangular members so related as to form a way therethrough, each triangular member comprising a bottom cross bar and converging side bars, a rail supported upon the cross bars centrally thereof, a car adapted to traverse said rail through said way, rails opposite the sides of the car connecting the converging

side members of the triangular frames together, means at the sides of the car engaging said rails to assist in maintaining the car in equilibrium, cross braces for the triangular frames connecting the converging side members at a point adjacent to the car and above the rails at the sides of the car, and braces connecting the side members of the triangular frames to the bottom cross bars at points below the side rails, substantially as described.

6. In a monorailroad construction, a frame comprising a plurality of triangular members so related as to form a way therethrough, each triangular member comprising a bottom cross bar and converging side bars forming an unobstructed space therewithin, a rail mounted upon the bottom cross bars centrally thereof, a car adapted to traverse said rail through said way, yielding abutments at the opposite sides of the car, and rails connecting the converging side members of the triangular frames together at points intermediate the ends of the same.

7. In a monorailroad construction, a frame comprising a plurality of triangular members so related as to form a way therethrough, each triangular member comprising a bottom cross bar and converging side bars forming an unobstructed space therewithin, a rail mounted upon the bottom cross bars centrally thereof, a car adapted to traverse said rail through said way, and bars connecting the converging side members of the triangular frames together at points intermediate the ends of the same.

8. In a monorailroad construction, a frame comprising a series of triangular members so related as to form a way therethrough, each triangular member comprising a bottom bar and converging side bars, a tie in which the bottom bar is seated, a longitudinal sill in which the tie is seated, and a rail mounted on said sill over said tie and bottom bar.

9. In a monorailroad construction, a frame comprising a series of open members connected together at their sides and so related as to form a way therethrough, each open member comprising a bottom bar and side bars, a tie in which the bottom bar is seated, a longitudinal sill in which the tie is seated, and a rail mounted on said sill over said tie and bottom bar.

10. In a monorailroad construction a frame comprising a series of open members so related as to form a way therethrough, each open member comprising a bottom bar and side bars, a tie in which the bottom bar is seated, a longitudinal sill, and a rail mounted on said sill over said tie and bottom bar.

11. In a monorailroad construction, a frame comprising a series of open members so related as to form a way therethrough, each open member comprising a bottom bar

and side bars, a tie to which the bottom bar is secured, a longitudinal sill in which the tie is seated, and a rail mounted on said sill over said tie and bottom bar.

12. In a monorailroad construction, a frame comprising a plurality of open members so related as to form a way therethrough, each member comprising a horizontal bottom bar and side bars connected together forming an unobstructed space therewithin, a base construction including cross ties to which the bottom cross bars are secured, a rail mounted upon the bottom cross bars centrally thereof, a car adapted to traverse said rail through said way, and bars connecting the side members of the open frames together at points intermediate the ends of the same.

Signed at New York, in the county of New York and State of New York, this 13th day of November A. D. 1912.

THOMAS CARL SPELLING.

Witnesses:
JOS. G. ABRAMSON,
KATHARINE C. MEAD.

Appendix B.

UNITED STATES PATENT OFFICE.

THOMAS CARL SPELLING, OF NEW YORK, N. Y.

MONORAILROAD.

1,105,540. **Patented July 28, 1914.**

Specifications of Letters Patented.
Application filed June 8, 1914. Serial No. 843,765.

To all whom it may concern:

Be it known that I, THOMAS C. SPELLING, a citizen of the United States, residing at New York, in the county of New York and State of New York, have invented certain new and useful Improvements in Monorailroads, of which the following is a specification, reference being had therein to the accompanying drawing.

This invention relates to improvements in monorailroad systems, and particularly to that type of system illustrated, for example, in my Patent No. 1058481, issued April 8, 1913. In the structure of my said patent, it will be observed that I provided at the opposite sides of the car resiliently mounted rollers adapted to traverse a pair of grooved rails mounted on the frame work constituting the train-way;

the purpose of such structure being to maintain the car in an erect position while the car is stationary and to minimize oscillation when the car is in movement, all as will be clear to persons skilled in the art.

As distinguished from the above stated arrangement, the present improvements contemplate, in combination with other useful instrumentalities, the provision of outwardly thrust rollers and coöperating rails arranged at the top or above the car in order to bring these means, as nearly as practicable directly above the centrally disposed car wheels, or the center of gravity of the car, where the cushioning devices are rendered more acute, so to speak, in that they may have a greater mutual coaction or influence upon each other, as the car may tend to sway in opposite directions, than is possible where such devices are relatively remotely associated, as is of necessity the case where they are entirely distinct and mounted in a lower position along the sides of the car.

I will illustrate herein and hereinafter specifically describe the preferred embodiment of my invention, and from such disclosure the nature and advantages of the many improved details of construction and arrangement of parts will be duly appreciated.

In the accompanying drawings forming part hereof, and where in the preferred embodiment of the invention to which I have alluded is illustrated, Figure 1, is a vertical cross sectional view through the framework, and associated structure, constituting the way within which the car or train is to travel, and similarly showing in section a car provided with improvements constituting the subject matter of this case, and Fig. 2 is a side elevation of a portion of the car way showing,—in a manner somewhat diagrammatic,—a car within such way. Fig. 3 is a detail view.

Referring more specifically to the drawings, wherein like reference characters designate the same part in the two views, A represents a series of closely associated triangular metallic frames suitably reinforced at the corners thereof by plates *a* and by similarly reinforced cross bars B, conveniently located at the upper portions of the frames, said frames being tied together at the predetermined distances apart by metallic bars C, of any suitable number, preferably running along the sides of the frame and the apices thereof.

The bottoms of the frames are firmly fixed by means serving therewith to form a road bed, for example, like the subject matter of my aforesaid patent, and not necessary to be discussed in detail herein, save by alluding to the fact that on this road bed is suitably mounted a monorail D, centrally disposed with reference to the base members of the triangular frames A, in position to be engaged

by the corresponding centrally arranged traction wheels E supporting the car F.

The car F may obviously be of any approved style or construction, but in keeping with my present conception the same should have a skeleton or frame-work of suitably reinforced metal, represented in a general way at *f* in order to properly support and resist the lateral strains incident to the operation of the parts now to be defined.

To relieve the car of shock, and prevent possible damage, flowing from the lateral or sidewise sway of the car when in motion, as also to maintain the car in its true vertical position when not in motion, I provide a pair of tracks G secured to the triangular frames at the juncture of the side bars thereof with the cross-bars B, these tracks being of angular cross section, as shown, reinforced by diagonal webs *g*, and having in their vertical faces roller grooves *g'* adapted to accommodate horizontally rotating rollers H thrust outwardly and maintained in contact with the tracks G under resilient pressure, as will soon be obvious.

J are a pair of nested spring plates of U-formation with their upper terminals spaced apart and their lower terminals superposed and fixedly secured by suitable bolting K or otherwise to strong metal top members L secured and carried by the metal framework of the car, the plates just referred to being of dished formation, or hollow, to provide depending edge flanges *l* at the sides of the car. The spaced terminals of said spring plates J, offset horizontally, carry therebetween the similarly arranged rounded-edge rollers H before mentioned.

In many instances, the spring plates will be adequate to sustain the car against lateral-swaying tendencies, but to meet more severe conditions, an auxiliary cushioning means is afforded, the same being in the nature of a fluid (conveniently air) cushion, comprising a cylinder M, either formed integrally with the top plate L or bolted securely thereto, the cylinder being provided with a valvecontrolled supply pipe *m*, and oppositely disposed pistons N linked by pivoted members *n* to the spring plates J, with a coiled spring O interposed between said pistons.

By the foregoing arrangement, it will be seen that three yieldably-resisting and shock absorbing elements are furnished in my improved mechanism, namely the spring plates J, the confined air within the cylinder intermediate of the pistons N, and the spring occupying the same relation to the said pistons. These elements combined mutually co-act to keep both rollers H in engagement with their respective tracks J at all times, for as they are compressed by lateral tilting of the car against one track in one direction, they exert a corresponding opposite pressure on the other track,

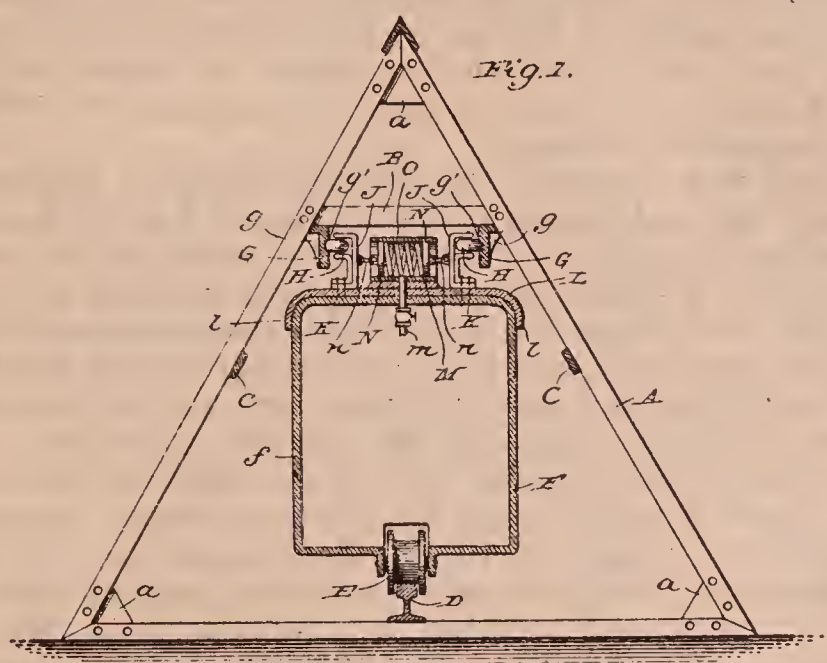

Fig. 1.

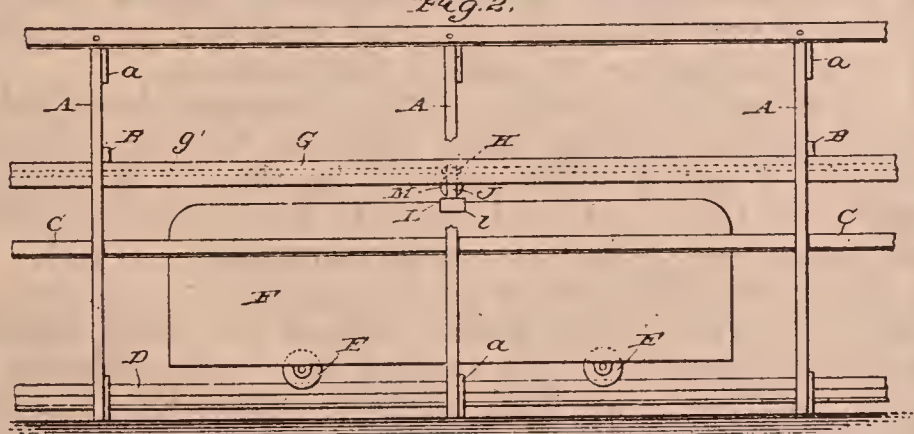

Fig. 2.

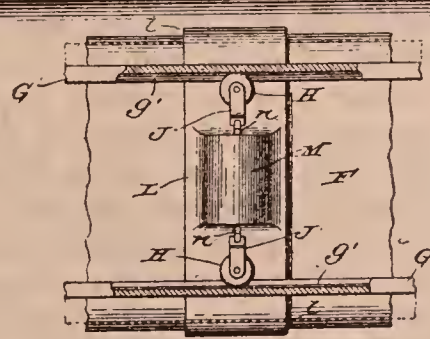

Fig. 3.

thus tending to right the car and restore it to its position of normal equilibrium.

The spring O, when compressed, will serve as a stop preventing further movement of the pistons and thereby limit the swaying movement of the car.

While I have herein set forth a special embodiment of my invention, it is with the realization,—as will also appear to persons skilled in the art to which the invention appertains,—that said invention is capable of embodiment in other forms and devices, as may be in accordance with the hereto appended claims.

Having thus described the invention, what is claimed is:

1. In a railroad system of the character described, a suitable car-way having guide rails at the sides thereof, oppositely disposed rollers carried by the car adapted to engage said rails, and means for resiliently maintaining said rollers in engagement with the rails comprising spring plates secured to the car and carrying the rollers at their free ends.

2. In a railroad system of the character descried, a suitable car-way having guide rails at the sides thereof, oppositely disposed rollers carried by the car adapted to engage said rails, and means for resiliently maintaining said rollers in engagement with the rails comprising spring plates secured to the car and carrying the rollers at their free ends, said plates consisting of two members nested together fastened at one end to the car, and separated at the other end to accommodate the rollers therebetween.

3. In a railroad system of the character described, a suitable car-way having guide rails at the sides thereof, oppositely disposed rollers carried by the car adapted to engage said rails, and fluid pressure means for resiliently maintaining said rollers in engagement with the rails.

4. In a railroad system of the character described, a suitable car-way having guide rails at the sides thereof, oppositely disposed rollers carried by the car adapted to engage said rails, and fluid pressure means for resiliently maintaining said rollers in engagement with the rails, comprising a cylinder mounted at the top of the car, and pistons working in said cylinder and connected to said rollers.

5. In a railroad system of the character described, a suitable car-way having rails at the sides thereof, oppositely disposed rollers carried by the car adapted to engage said rails, and means for resiliently maintaining said rollers in engagement with the rails comprising piston-like members connected to the rollers, and a spring interposed therebetween acting normally to force said rollers apart.

6. In a railroad system of the character described, a suitable car-way having guide rails at the sides thereof, oppositely disposed rollers carried by the car adapted to engage said rails, and means for resiliently maintaining

said rollers in engagement with the rails, in combination with means acting as a stop to limit the yielding movement of the rollers.

7. In a railroad system of the character described, a suitable car-way having guide rails at the sides thereof, and means for resiliently maintaining said rollers in engagement with the rails, comprising yieldable arms carrying the rollers, and fluid pressure means associated with said arms.

8. In a railroad system of the character described, a suitable car-way having guide rails at the sides thereof, and means for resiliently maintaining said rollers in engagement with the rails comprising yieldable arms carrying the rollers, and fluid pressure means associated with said arms, said last mentioned means comprising a cylinder and oppositely disposed pistons working therein.

9. In a railroad system of the character described, a suitable car-way having guide rails at the sides thereof, and means for resiliently maintaining said rollers in engagement with the rails comprising yieldable arms carrying the the rollers and fluid pressure means associated with said arms, said last mentioned means comprising a cylinder and oppositely disposed pistons working therein, in combination with a spring interposed between the pistons.

10. In a railroad system of the character described, a suitable car-way having oppositely disposed guide rails, correspondingly disposed members carried by the car adapted to engage said rails, and means for resiliently maintaining said members in engagement with the rails, comprising spring plates secured to the car and carrying the members at their free ends.

11. In a railroad system of the character described, a suitable car-way having oppositely disposed guide rails, correspondingly disposed members carried by the car adapted to engage said rails, and means for resiliently maintaining said members in engagement with the rails, comprising spring plates secured to the car and carrying the members at their free ends, and means for restricting the yielding movement of said plates.

12. In a railroad system of the character described, a suitable car way having oppositely disposed guide rails, correspondingly disposed members carried by the car adapted to engage said rails, and fluid pressure means for resiliently maintaining said rollers in engagement with the rails, substantially as described.

13. In a railroad system of the character described, a suitable car-way having oppositely disposed guide rails, correspondingly disposed members adapted to engage said rails, a top plate secured to the car frame, and means carried by said top plate for resiliently maintaining said

members in engagement with the rails, substantially as described.

14. In a railroad system of the character described, a suitable car-way having oppositely disposed guide rails, correspondingly disposed members adapted to engage said rails, a top plate secured to the car frame, and means carried by said top plate for resiliently maintaining said members in engagement with the rails, said top plate having depending flanges adapted to engage the side portions of the car.

15. In a railroad system of the character described, a suitable car-way having oppositely disposed guide rails, correspondingly disposed members carried by the car adapted to engage said rails, and fluid pressure means for resiliently maintaining said members in engagement with the rails, in combination with other means for supporting said members in operative position relative to the rails.

16. In a railroad system of the character described, a suitable car-way having oppositely disposed guide rails, correspondingly disposed members adapted to engage said rails, a top plate secured to the car frame, and means carried by the top plate for resiliently maintaining said members in engagement with the rails comprising fluid pressure means for resisting the yielding movement of the members, and other means for supporting said members in operative position relative to the rails.

In testimony whereof I hereunto affix my signature in the presence of two witnesses.

THOMAS CARL SPELLING.

Witnesses:
JOSEPH E. LAUBER,
WALTER C. HARDING.

LIBRARY OF CONGRESS
0 033 266 442 6